Los Angeles, CA

Alexandria, VA

Boston, MA

CHUTES PATENTED CONSTRUCTION DEBRIS CHUTES INTERNATIONAL™ DIVISION OF TDR SYSTEMS, INC.

Let The Debris Removal Professionals Design Your Next Chute System

CHUTES International™ pioneered and revolutionized the construction debris chute industry.

Our unique, patented, 3' X 3', heavy duty steel system provides safe, fast and economical disposal of debris for new and heavy renovation work. The debris is directly deposited through the chute door and falls into the containers at street level.

Washington D.C.

The construction debris chutes are designed to be mounted through windows, up and away from the structure or any new exterior walls.

CHUTES International™ is the only company offering complete services including design, installation, rental, dismantling, service, sales and buy-backs of their debris chute. We can design a system to meet your every specification and need.

CHUTES International™ utilizes the only debris removal system **meeting or exceeding all OSHA standards and requirements** and has acheived a reputation for supplying the most efficient, maintenance-free, and the highest quality construction debris chute in the industry.

CHUTES International™ works worldwide - Call us with your specific needs.

Photo & Job by: Haynes Scaffolding

Palm Beach, FL

Safety

Secure: Lockable doors are provided at each intake.
Fireproof: Chutes are made of heavy steel.
Stable: Tested to withstand wind loads of hurricane force (70-100 mph) for sustained periods.
Strong: Designed, tested, and constructed to resist impacts from deposited materials.

Meets OSHA Standards

CHUTES PATENTED CONSTRUCTION DEBRIS CHUTES INTERNATIONAL™ DIVISION OF TDR SYSTEMS, INC.

4400 Austin Lane, White Plains, Maryland 20695

(800) 88-CHUTE › (301) 753-4100 › FAX (301) 753-4108

e-mail: chutes@erols.com › web site: www.chutesintl.com

The Nationwide Chutes Supermarket

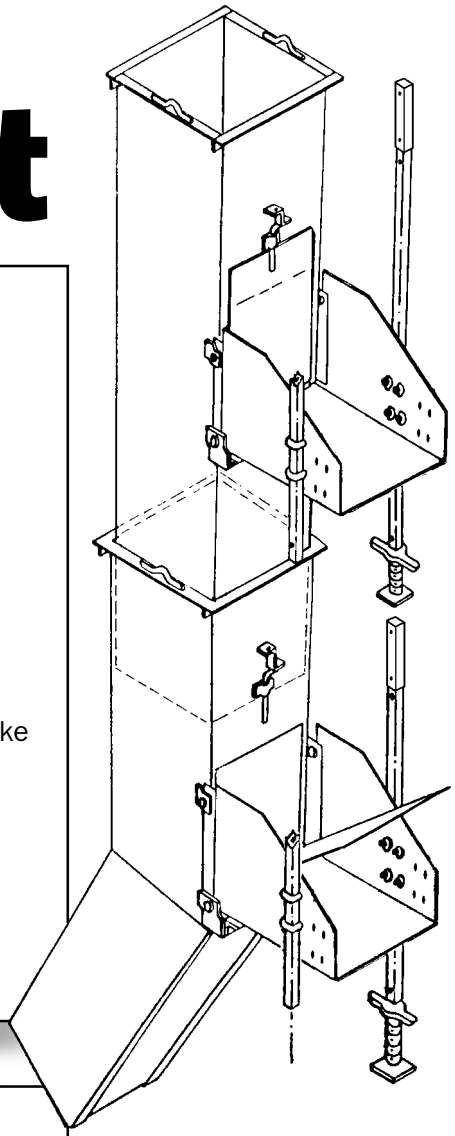

Chutes Sections:	tapered
Weight Minimum:	1,150 lbs./standard section
Lengths (standard):	sections with intake 14', 12' sections without intake 14', 12', 8', 4'
Frame Opening:	36" X 36" square
Body Steel Thickness:	minimum .125"
Interior Door (lockable):	.125" thick
Intake Opening:	33.5" X 33.5"
Intake Door (lockable):	.187" thick
Offset Sections:	35 degree incline 1/2" steel bottom plate with or without intake
Interior Baffles:	.25" X 8" X 34.5"
Suspension System:	independently supports itself via adjustable telescoping legs
Screw Jacks:	1.5" diameter X 18" 50,000 # rating

Also Specializing In:

- 32" Inside Diameter, Injection Molded Polyethelyne Chutes
- Internal Trash, Linen and Mail Chutes
- Compactors and Containers
- Postal Specialties
- Metal and Tenant Storage Lockers
- Replacement Parts
- Call for more information and a free estimate

CHUTES INTERNATIONAL™
PATENTED CONSTRUCTION DEBRIS CHUTES
DIVISION OF TDR SYSTEMS, INC.

4400 Austin Lane
White Plains, MD 20695

(800) 88-CHUTE
(301) 753-4100
FAX (301) 753-4108

e-mail: chutes@erols.com
web site: www.chutesintl.com

Due to TDR Systems, Inc.'s continuous improvement program, it reserves the right to change the design of the items shown here-in without prior notice.

©2001 TDR Systems, Inc.